Cambridge International AS & A Level

Cambridge International Examinations
Cambridge International Advanced Subsidiary and Advanced Level

CANDIDATE NAME	

CENTRE NUMBER						CANDIDATE NUMBER				

0002365729

BIOLOGY **9700/43**

Paper 4 A Level Structured Questions **October/November 2017**

2 hours

Candidates answer on the Question Paper.

No Additional Materials are required.

READ THESE INSTRUCTIONS FIRST

Write your Centre number, candidate number and name on all the work you hand in.
Write in dark blue or black pen.
You may use an HB pencil for any diagrams or graphs.
Do not use staples, paper clips, glue or correction fluid.
DO **NOT** WRITE IN ANY BARCODES.

Section A
Answer **all** questions.

Section B
Answer **one** question.

Electronic calculators may be used.
You may lose marks if you do not show your working or if you do not use appropriate units.

At the end of the examination, fasten all your work securely together.
The number of marks is given in brackets [ ] at the end of each question or part question.

This document consists of **21** printed pages and **3** lined pages.

DC (CW/AR) 127822/2
© UCLES 2017

CAMBRIDGE International Examinations

Section A

Answer **all** questions.

1 The St. Lawrence river in Canada has been identified as an area with very high biodiversity.

(a) Explain how the term biodiversity can be considered at different levels.

.....

.....

.....

.....

.....[2]

(b) The St. Lawrence river is rich in species of aquatic mammals, especially whales.

In spring, thousands of whales swim from the Atlantic ocean up the St. Lawrence river. Thirteen different species of whale have been recorded. One of these is the blue whale, *Balaenoptera musculus*.

Fig. 1.1 is a diagram of a blue whale.

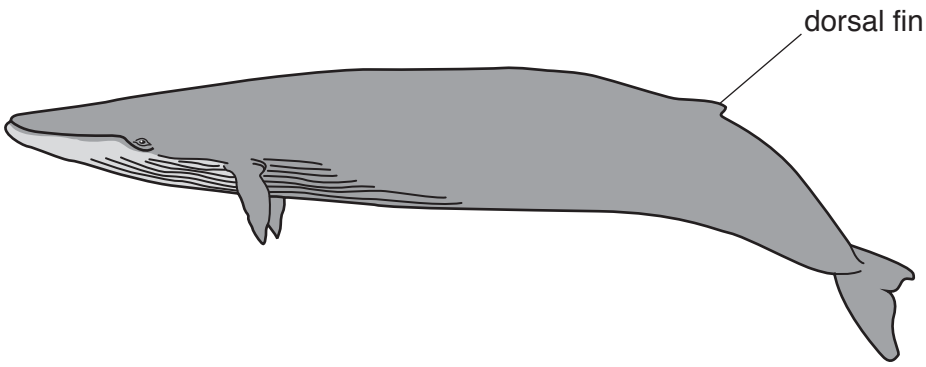

Fig. 1.1

Photographs of blue whales are analysed by computer so that individual whales can be identified and population abundance can be estimated. Each blue whale is different in colour and in the shape of dorsal fin. Different whales also have different patterns of scarring.

(i) State the **two** sources of phenotypic variation in the blue whale population.

.....

.....

.....[1]

(ii) Suggest **one** reason why it is difficult to measure the **actual** population size of the blue whale.

.....

.....

.....[1]

(c) The St. Lawrence river runs through very busy industrial areas. It has many ports for cargo ships, a good fishing trade and many whale-watching boat trips for tourists.

Decades of whale hunting has caused a large decrease in whale population sizes. Since whale hunting was banned, whale populations have not recovered.

Seven of the thirteen whale species in the St. Lawrence river have been rated as endangered species.

Suggest **two** reasons why the populations of whales have not recovered since the ban on whale hunting.

.....

.....

.....

.....

.....[2]

(d) Fat samples from under the skin of individual whales of several different species were taken. These were analysed and the concentrations of the toxins DDT and PCBs were measured.

Suggest why whales were found to have accumulated very high concentrations of DDT and PCBs in their fatty tissues.

.....

.....

.....

.....

.....[2]

(e) Algal blooms sometimes occur in the area of the Atlantic ocean near the St. Lawrence river. These result from rapid population growth of unicellular algae such as *Alexandrium tamarense*.

(i) *A. tamarense* produces saxitoxin, a neurotoxin that causes muscle paralysis by acting on voltage-gated sodium ion channels in neurones. Saxitoxin can kill whales.

Suggest how saxitoxin results in the death of a whale.

.....

.....

.....

.....

.....[2]

(ii) Algae, such as *A. tamarense*, used to belong to the kingdom Plantae but are now classified in the kingdom Protoctista.

State **one** reason why *A. tamarense* is classified in the kingdom Protoctista and **not** in the kingdom Plantae.

.....

.....[1]

[Total: 11]

© UCLES 2017

2 The light dependent stage of photosynthesis in a suspension of isolated chloroplasts can be investigated using the Hill reaction.

Dichlorophenolindophenol (DCPIP) can be used to follow the process. DCPIP is a blue dye which turns colourless when it is reduced by accepting hydrogen and electrons.

oxidised DCPIP → reduced DCPIP
blue → colourless

(a) **(i)** The natural hydrogen acceptor in chloroplasts that is replaced by DCPIP in the Hill reaction is NADP. Reduced NADP is then used in the light independent stage of photosynthesis.

State the role of reduced NADP in the light independent stage.

.....

.....

.....

.....[2]

(ii) Predict **and** explain the effect on the concentration of RuBP in the chloroplasts if DCPIP becomes reduced instead of NADP.

.....

.....[1]

DCPIP can be used to investigate the effect of light wavelength on the rate of the light dependent stage of photosynthesis. One method is described here:

- Dip a small glass capillary tube into a beaker containing a suspension of isolated chloroplasts. Some of the chloroplast suspension will be drawn into tube **A**, forming a colour standard.
- Mix the rest of the chloroplast suspension with blue DCPIP solution. Dip a second capillary tube into this to draw up a sample, to form tube **B**.
- Store the chloroplast-DCPIP mixture for future use by wrapping the beaker in foil and covering it with a removable foil lid, as shown in Fig. 2.1.

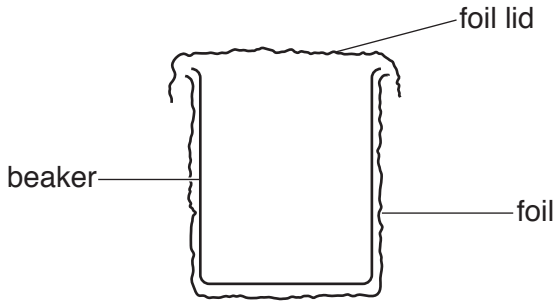

Fig. 2.1

- Place tube **A** and tube **B** on a white tile under a bench lamp placed 15 cm away and immediately cover them with a purple filter, as shown in Fig. 2.2.

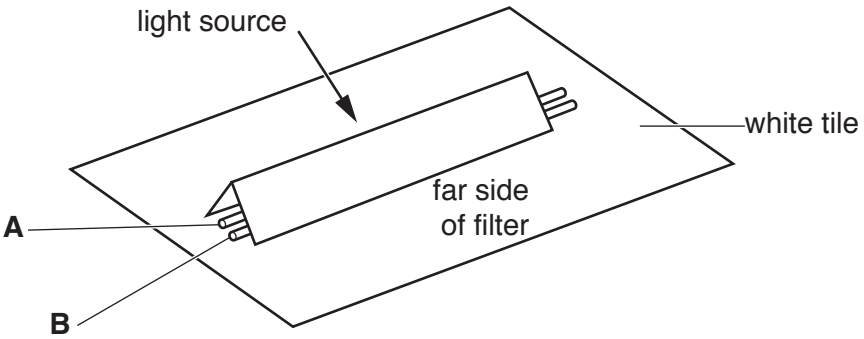

Fig. 2.2

- Measure the time for tube **B** to change colour to match that of tube **A**. This is the time taken for DCPIP to decolourise.
- Repeat four more times using the same tube **A** and a fresh tube **B**, placing the tubes under a different coloured filter each time.

(b) Explain the reasons for:

the colour standard tube **A**

.....

.....

.....

.....

covering the beaker containing the chloroplast-DCPIP mixture with foil.

.....

.....

.....

.....[4]

(c) Table 2.1 shows the results of the experiment.

Table 2.1

colour of filter	wavelength of light/nm	time taken to decolourise DCPIP/s	rate of light dependent stage of photosynthesis/s^{-1}
purple	425	37	27.0
blue	450	84	11.9
green	525	480	2.1
orange	625	45	.....
red	675	50	20.0

(i) Complete Table 2.1 by calculating the rate of the light dependent stage of photosynthesis for the orange wavelength, using the formula:

$$\text{rate} = \frac{1000}{t} \quad \text{where } t = \text{time in seconds.}$$ [1]

(ii) With reference to Table 2.1, describe **and** explain the effect of light wavelength on the rate of the light dependent stage of photosynthesis.

.....

.....

.....

.....

.....

.....

.....

.....

.....[5]

[Total: 13]

3 Fig. 3.1 shows a red squirrel, *Sciurus vulgaris*. This species is native to the British Isles, meaning it has lived there for at least 10 000 years. In the 1800s a related but slightly larger species, the grey squirrel, *Sciurus carolinensis*, was introduced from North America.

Fig. 3.1

A history of the interaction between red squirrels and grey squirrels includes these facts:

- Grey squirrels, which occupy a similar niche to red squirrels, expanded their range rapidly after introduction.
- Grey squirrels carry a virus that does not harm them, but which kills red squirrels.
- Red squirrels became extinct in many parts of the British Isles.
- Recently some areas have seen a reversal of this trend. There has been a decrease in numbers of grey squirrels. Red squirrels have re-colonised their former areas of habitat.
- This has happened in areas where protection of a native predator species, the pine marten, *Martes martes*, has resulted in an increase in the number of these predators.
- Analysis of pine marten faeces shows that they catch and eat many more grey squirrels than red squirrels.

(a) Use the information given to identify the causes of the extinction of red squirrels in many parts of the British Isles.

.....

.....

.....

.....

.....

.....[2]

(b) Describe how the level of molecular similarity between the two species, *S. vulgaris* and *S. carolinensis*, can be investigated.

.....

.....

.....

.....

.....

.....

.....[3]

(c) Explain how the differing effect of pine marten predation on red and grey squirrel populations is due to natural selection and the separate evolution of each squirrel species.

.....

.....

.....

.....

.....

.....

.....[3]

[Total: 8]

© UCLES 2017

4 There are many different strains of the soil bacterium *Bacillus thuringiensis*. Each produces slightly different types of Cry-proteins, which are toxic to insects. Some types of cotton, known as Bt cotton, have been genetically modified to produce one of these proteins, Cry1Ac. This protein acts specifically to kill the larvae of butterflies and moths, including the cotton bollworm, *Helicoverpa zea*, a serious pest of cotton crops.

The genetically modified cotton contains a 'genetic package' that includes:

- the gene coding for Cry1Ac, the Bt protein
- a promoter
- a herbicide resistance gene that is used as a marker.

(a) **(i)** Suggest the advantages of using, in Bt cotton, the gene coding for Cry1Ac, rather than one of the genes coding for other types of the Cry-protein.

.....

.....

.....

.....

.....

.....[2]

(ii) Explain why a promoter is included in the genetic package.

.....

.....

.....

.....

.....

.....[2]

(iii) Suggest how the herbicide resistance gene can be used as a genetic marker.

.....

.....

.....

.....

.....

.....

.....[3]

(b) Table 4.1 shows information about the cultivation of Bt cotton and non-GM cotton by farmers in India in 2002–2003.

Table 4.1

	Bt cotton	**non-GM cotton**
mean yield of cotton / kg ha^{-1}	264	196
seed cost / rupees ha^{-1}	629	196
insecticide cost / rupees ha^{-1}	503	851
net income / rupees ha^{-1}	2118	1253

(i) With reference to Table 4.1, compare the costs involved in growing Bt cotton with the costs involved in growing non-GM cotton.

.....

.....

.....

.....

.....[2]

(ii) Table 4.1 shows that farmers who grow Bt cotton have a higher net income than those who grow non-GM cotton.

Use the information in the table to suggest **one** reason why some farmers in India choose to grow non-GM cotton, rather than Bt cotton.

.....

.....[1]

(c) In one region of India, Andhra Pradesh, a severe drought in 2002–2003 meant that Bt cotton grew less well than other varieties of cotton that were better adapted for the conditions.

Suggest how a variety of Bt cotton that is better adapted to dry conditions could be produced from the existing varieties of Bt cotton, **without** using gene technology.

.....

.....

.....

.....

.....

.....

.....[3]

[Total: 13]

5 **(a)** Explain the importance of the myelin sheath in the transmission of action potentials.

.....

.....

.....

.....

.....

.....

.....

.....

.....[4]

(b) Acetylcholine is a neurotransmitter.

Describe the events that occur at a synapse that lead to the release of acetylcholine.

.....

.....

.....

.....

.....

.....

.....

.....

.....

.....

.....[5]

[Total: 9]

© UCLES 2017

6 Chemiosmosis is the term used to describe the synthesis of ATP using a proton gradient across a membrane in a mitochondrion or chloroplast. It was first demonstrated by Peter Mitchell in 1961.

(a)
- In some of his experiments, Peter Mitchell used mitochondria that had been isolated from cells.
- The mitochondria were kept in liquid, in glass dishes, to which ADP, Pi and other substances were added.
- The temperature, pH and water potential were kept constant.
- After a period of time he checked for the presence of ATP.

The contents of some of the dishes are shown in the table below.

Complete the table using a tick (✓) if ATP was produced and a cross (✗) if no ATP was produced.

dish contents	ATP produced
mitochondria + ADP + Pi + acetyl CoA + oxygen	
mitochondria + ADP + Pi + acetyl CoA	
mitochondria + ADP + Pi + low concentration of protons (H^+)	
mitochondria + ADP + Pi + high concentration of protons (H^+)	

[2]

(b) Explain the consequences to a mitochondrion if the water potential of the liquid in the dishes is higher than the water potential of the mitochondrial matrix.

.....

.....

.....

.....[2]

(c) State the specific role of oxygen in the mitochondrion.

.....

.....[1]

(d) Name the enzyme used to produce ATP in chemiosmosis.

.....[1]

(e) Describe the role of the inner mitochondrial membrane (crista) in chemiosmosis.

.....

.....

.....

.....

.....

.....

.....

.....

.....[4]

[Total: 10]

7 **(a)** Galactosaemia is a rare genetic disease in which the build-up of the monosaccharide galactose can result in an enlarged liver, kidney failure and brain damage. Galactose is produced in the body from the digestion of the sugar lactose, found in milk.

Galactosaemia is caused by a recessive mutation of the *GALT* gene. The normal dominant allele codes for an enzyme which converts galactose to glucose.

(i) Suggest how a person with galactosaemia can minimise damage to the liver, kidney and brain.

.....

.....[1]

(ii) Explain how a mutation in the *GALT* gene could result in a change in the enzyme responsible for the metabolism of galactose.

.....

.....

.....

.....

.....

.....

.....

.....

.....[4]

© UCLES 2017

(b) If the phenotypes of parents are known, the probabilities of having a child with galactosaemia, an unaffected child (healthy, not a carrier) or a child who is a carrier can be calculated.

Complete Table 7.1 to show the results of these calculations.

Table 7.1

parent 1	parent 2	percentage probability of having a child with galactosaemia	percentage probability of having an unaffected child	percentage probability of having a child who is a carrier
unaffected	carrier	0	50	50
carrier	carrier	.....	.....	.....
unaffected	has galactosaemia	.....	.....	.....
carrier	has galactosaemia	50	0	50

[2]

(c) Testing for galactosaemia is usually carried out on newborn babies, although it is possible to carry out the test on a foetus.

Explain how the presence of galactosaemia in a foetus may be determined.

.....

.....

.....

.....

.....[2]

[Total: 9]

8 **(a)** Homeostasis in mammals involves negative feedback mechanisms.

Outline how a negative feedback mechanism works.

.....

.....

.....

.....

.....

.....

.....

.....

.....[4]

(b) Fig. 8.1 is a diagram summarising the role of the nervous and endocrine systems in the control of blood glucose concentration.

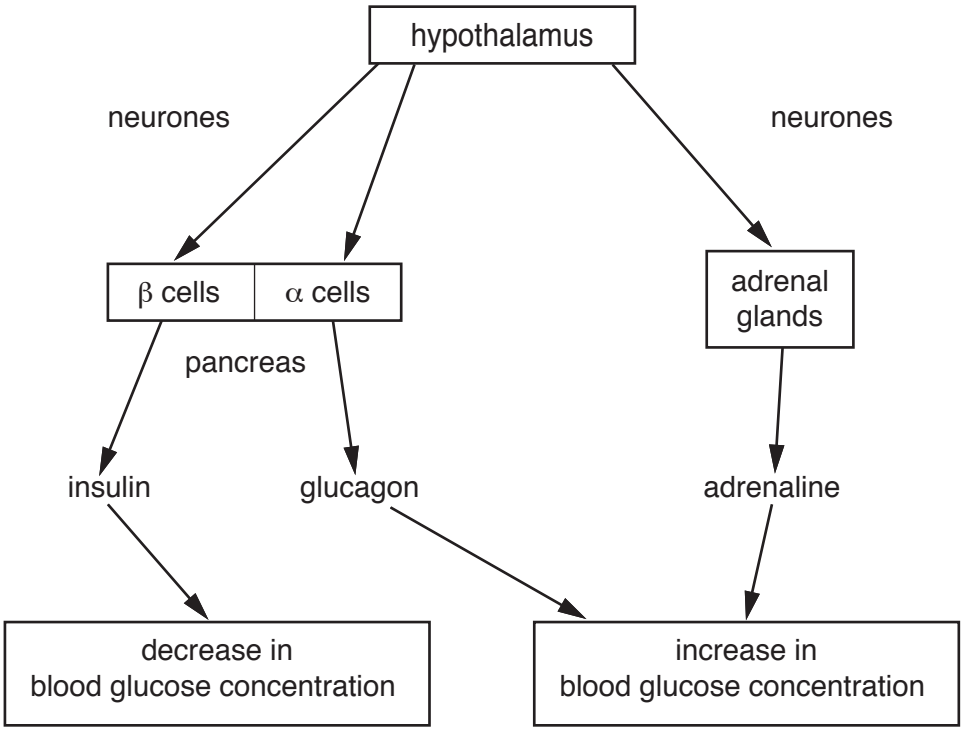

Fig. 8.1

With reference to Fig. 8.1, describe the role of the **nervous system** in the control of blood glucose concentration.

.....

.....

.....

.....

.....

.....

.....

.....

.....

.....

.....[4]

(c) If the core temperature of the human body falls, the hypothalamus sends impulses to activate several physiological responses, some of which are listed below.

For each one, state how it would help to bring the core temperature back to normal.

vasoconstriction .....

.....

.....

shivering .....

.....

.....

increasing secretion of adrenaline .....

.....

.....[4]

[Total: 12]

Section B

Answer **one** question.

9 **(a)** Explain how rice is adapted to grow with its roots submerged in water. [6]

(b) Explain how the leaves of maize or sorghum are able to maximise carbon dioxide fixation at high temperatures. [9]

[Total: 15]

10 **(a)** Describe the types of gene mutation that can occur **and** explain how some mutations can lead to a shortened polypeptide. [6]

(b) Outline the effects of the mutant sickle cell allele on the phenotype of a person with sickle cell anaemia. [9]

[Total: 15]

.....

.....

.....

.....

.....

.....

.....

.....

.....

.....

.....

.....

.....

.....

.....

.....

.....

© UCLES 2017

Permission to reproduce items where third-party owned material protected by copyright is included has been sought and cleared where possible. Every reasonable effort has been made by the publisher (UCLES) to trace copyright holders, but if any items requiring clearance have unwittingly been included, the publisher will be pleased to make amends at the earliest possible opportunity.

To avoid the issue of disclosure of answer-related information to candidates, all copyright acknowledgements are reproduced online in the Cambridge International Examinations Copyright Acknowledgements Booklet. This is produced for each series of examinations and is freely available to download at www.cie.org.uk after the live examination series.

Cambridge International Examinations is part of the Cambridge Assessment Group. Cambridge Assessment is the brand name of University of Cambridge Local Examinations Syndicate (UCLES), which is itself a department of the University of Cambridge.

© UCLES 2017